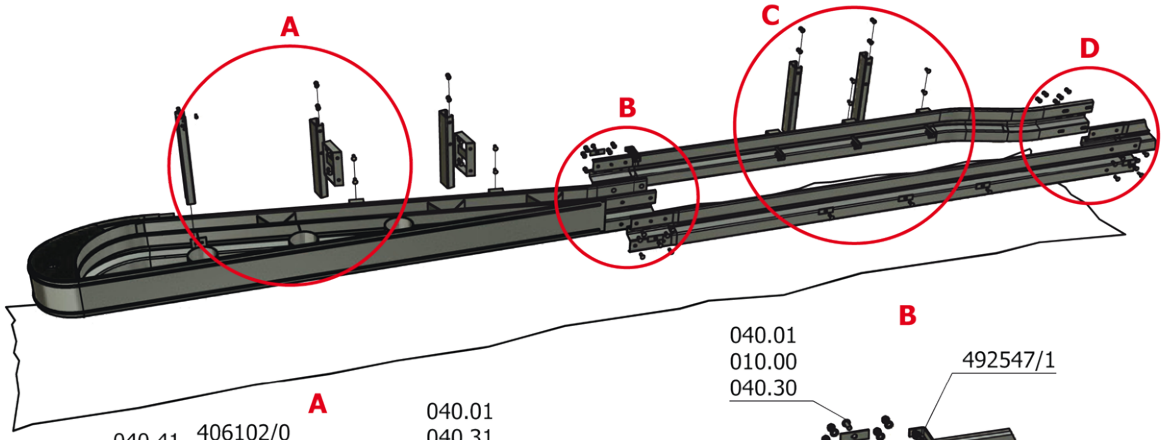

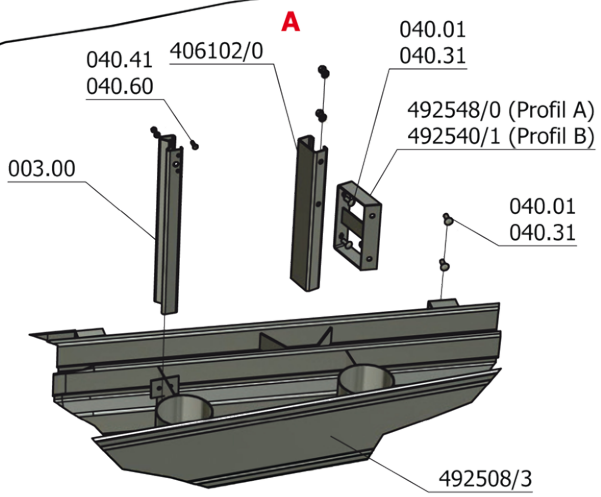

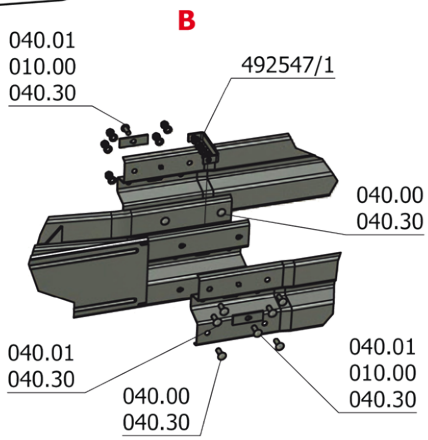

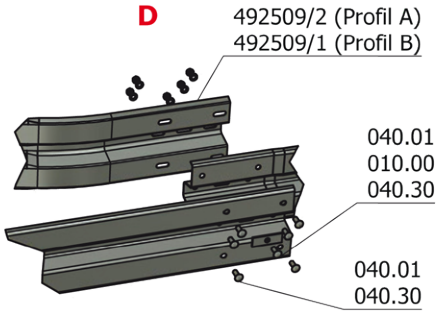

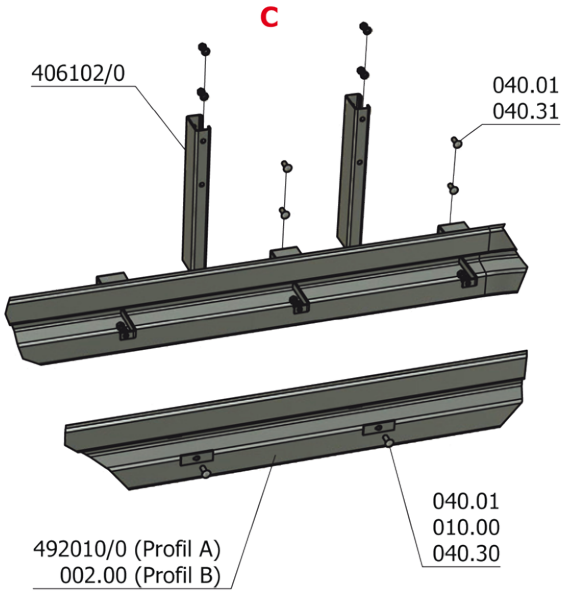

Stückliste · Components list

Name	Artikel Nr. Part no.	Anzahl/Stück Number/Unit
SP-Holm Beam (B) 4.300 mm	002.00	1
Pfosten Post Sigma 100 1700 mm	003.00	1
Decklasche Plate M 16	010.00	6
Pfosten Post C 125 1900 mm	406102/0	4
Primus P2 Einzelkörper Chassis	492508/3	1
P2 Übergangsholm Transition Beam (B)	492509/1	1
P2 Anschlußbügel Connection Bracket (B)	492540/1	2
Primus P2 Bügel Bracket	492547/1	1
HRK-Schraube Screw M16x27 4.6	040.00	10
HRK-Schraube Screw M16x40 4.6	040.01	23
Scheibe Washer Ø 18	040.30	23
Scheibe Washer 40x18x4 mm	040.31	10
Sechskantschraube Screw M10x30	040.41	1
Scheibe Washer Ø 11	040.60	1

Montagetafel · Assembly drawing

Primus P2

P2A · x1/y2 · Z2 · A

© 2011 Saferoad RRS GmbH, Please note that forwarding this drawing without permission from Saferoad RSS GmbH is a break of copyright. Please contact Saferoad RSS GmbH for information about corporate licences +49 30 212 491 11.

Weight: 365,00 kg
(Drawing no.K702020-3-1)