Documentation of the producer
According to EN 1317:5 standard point 5.2 Product description

Equipment and employees
The Contractor should produce evidence that he has the possibility to use special equipment to assemble and transport barriers, which is safe to use. The team performing road works should be under continuous supervision, executed by a properly qualified employee. The Contractor shall equip employees with means of individual protection. Vehicle marking and protection of the working place should be compliant with current legal regulations binding in the place where works are performed.

Materials
Materials should be compliant with requirements stated in Documentation of the Manufacturer.

Individual barrier elements are packed in bundles with size depending on the weight of elements and the size of the commission. Small barrier elements are delivered in containers or cases.

Each bundle or case shall have a tag including at least the following information:
- name and address of the producer,
- name of the product, together with the name and marking of the element,
- date of production,
- weight of the bundle, container or case,
- number of items in one delivery.

Barrier elements should be stored in places and conditions, in which they shall not be exposed to mechanical defects or intensive corrosion.

Stages of assembly works
Assembly works include the following stages:
1) **Preparatory works and measurements** (indication of barrier road with verification of the course of underground installations, determination of posts location, indication of possible passage routes, crossings as well as final and initial barrier sections).
2) **Placing posts of the protective barriers system** – placing posts within the distance from the edge of the road stated in Project Documentation. During this stage of works it is essential to verify settlement, height and distance between posts. In case when placing posts of protective barriers system shall be executed by vibrating, due to cyclical blows of the pile-driver head on the head of the post, deformation and partial damage of the galvanized layer on the post is allowed. The scope of deformations and damages of the galvanized layer depends on the soil class and the degree of its concentration. This is a common phenomenon

and therefore it does not signify the quality of works. In such cases the damaged galvanized layer is repaired with zinc paint. The deformed head of the post cannot be cut.

3) **Assembly of protective barriers system –** Assembly of protective barrier elements should be made according to Documentation of the Producer and Project Documentation. When assembling protective barriers system it is forbidden to make any holes or cuts violating the galvanized layer of particular elements. Assembly of protective road barriers includes:
   a) assembly of distancing elements within the protective barriers system with the use of appropriate joining elements,
   b) assembly of guides for distancing elements with the use of appropriate joining elements. During this stage of works adjoining segments of guides need to be connected according to the direction of vehicle movement, in a way, which in case of accident will enable the vehicle to slide along protective barriers system without touching edges of the guides,
   c) assembly of initial and final segments of protective barriers system,
   d) regulation of joining element's tightening moment,
   e) checking the continuity of galvanized surface and repair of possible damages,
   f) fixing reflective elements on protective barriers system.
4) **Quality control of the works** should include:
   a) verifying the compliance between the assembly of protective barriers system with Project Documentation and Documentation of the Producer, with consideration of possible size deviations,
   b) test of galvanized layer thickness and its appearance.
5) **Site arrangement**

Technical specification for road restraint system StalPro Rail sy on ground:

Steel quality: S235JR in accordance with EN 10025-2
Steel quality: S355MC in accordance with EN 10149-2
Hot-dip zinc coating:
- in accordance with EN ISO 1461
- continuous method according to EN 10346

Bolts:
Bolts in accordance with EN ISO 898-1
- M 16 x 25 according to drawing DBO-1930; property class 8.8. The usage of M16x27 (DBO-1932) is allowed
- M 16 x 40 according to EN ISO 4017; property class 5.8; (DBO-1902)

Nuts according to EN ISO 4032
Nuts with flange according to ISO 4161; property class 8 – as option
Washers according to EN ISO 7089 and EN ISO 7091
Tightening torque of the bolts:
M 16 - T = 70 ± 10 [Nm]

The usage of Guardrail type A(W) and Guardrail type B is allowed on the base of the report number RSTA-20140806-A.

List of elements StalPro Rail sy

ID	Part name	No of drawing	Material/ property class	Theoretical mass [kg]
1	Guardrail type B or A(W)	DBO-0148, DBO-1315/ DBO-0634	S355MC	43.0/47.4
2	Sigma Post StalPro	DBO-1319	S355MC	17.3
3	Washer M16	DBO-0513	S235JR	0.16
4	Bolt M16x25	DBO-1930	8.8	-
5	Bolt M16x40	DBO-1902	5.8	-

Sequence of assembly in accordance with attached drawings:

StalPro Rail sy - Assembly drawing safety barrier StalPro Rail sy
StalPro Rail sy - Single section
StalPro Rail sy - Single side safety barrier StalPro Rail sy
StalPro Rail sy - Assembly of bolt M16x40 for system StalPro Rail sy
StalPro Rail sy - Assembly of bolt M16x40 for system StalPro Rail sy (connection without post)
StalPro Rail sy - Assembly of bolt M16x25 for system StalPro Rail sy

The tolerance for height of the top of the system is ±20mm.
Tested length of system is 40 m (without terminals).

Date of publication: 24.03.2020

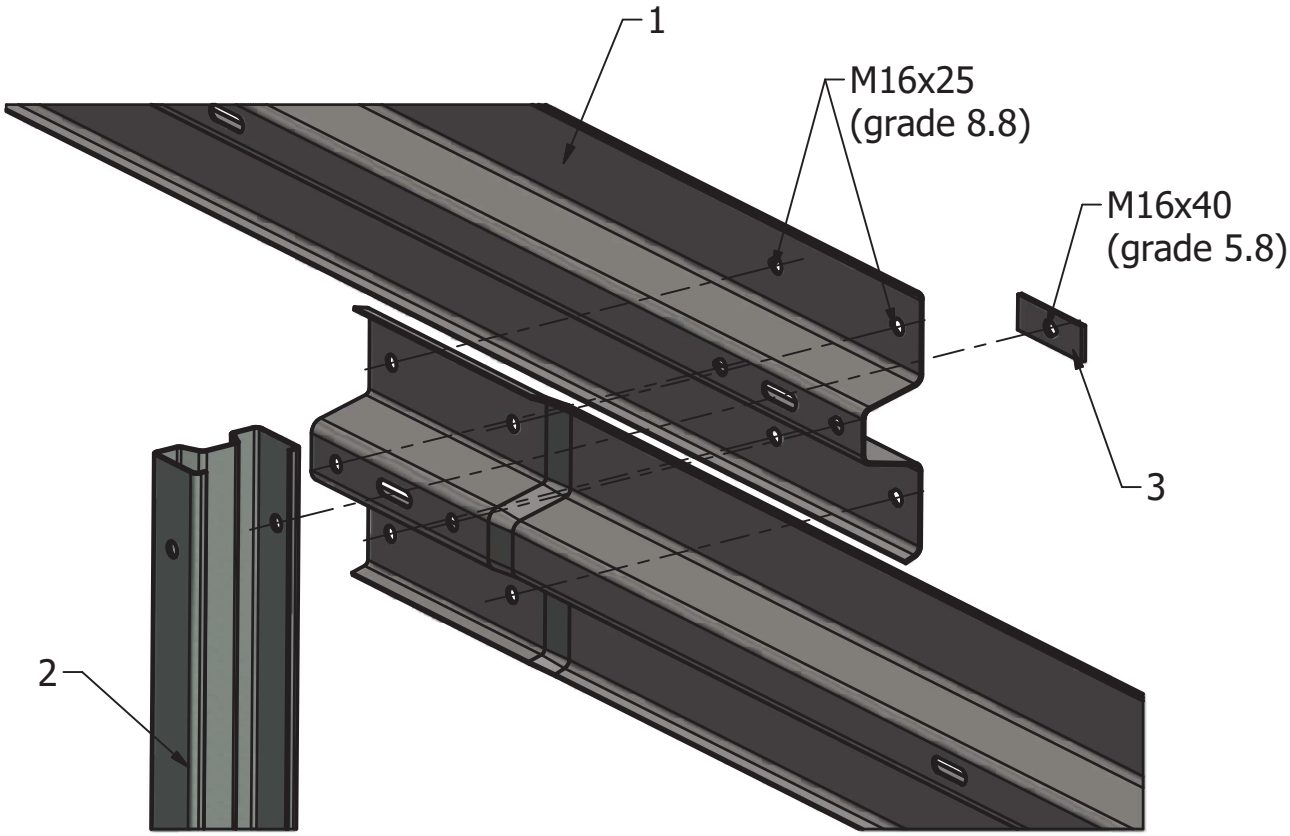

List of elements:
1. Guardrail type B (DBO-0148, DBO-1315)
2. Sigma Post StalPro (DBO-1319)
3. Washer M16 (DBO-0513)

Drawing name Assembly drawing safety barrier StalPro Rail sy		Mass -	INVENTOR	Change drawing No
Archive index	Number of drawing StalPro Rail sy		Sheet No 1 Amount 1	Substituted by
STALPRODUKT S.A. - BOCHNIA				

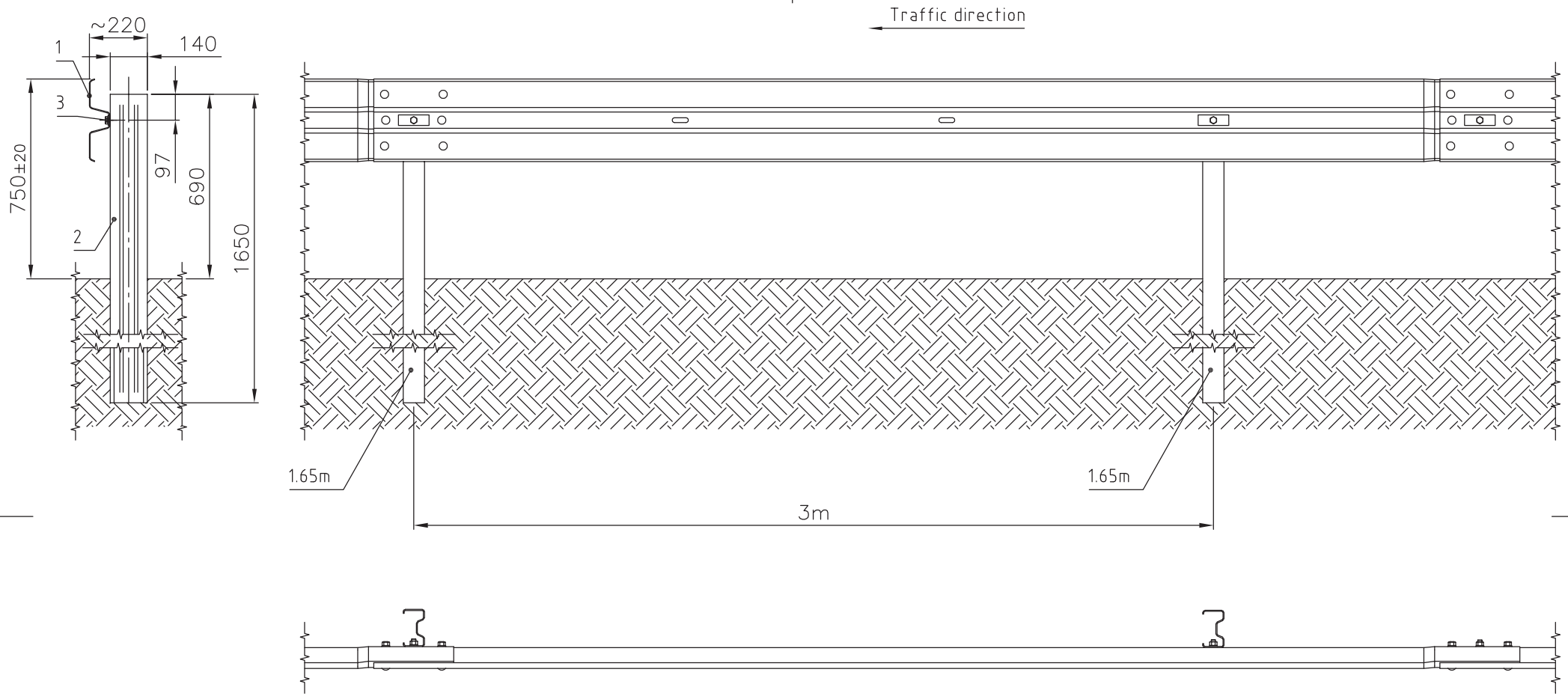

List of elements:

1. Guardrail type B (DBO–0148, DBO–1315)
2. Sigma Post StalPro (DBO–1319)
3. Washer M16 (DBO–0513)

Drawing name Single section		Mass	AutoCAD	Change drawing No
	Archive index	Number of drawing StalPro Rail sy	Sheet No Amount	Substituted by
		STALPRODUKT S.A.		

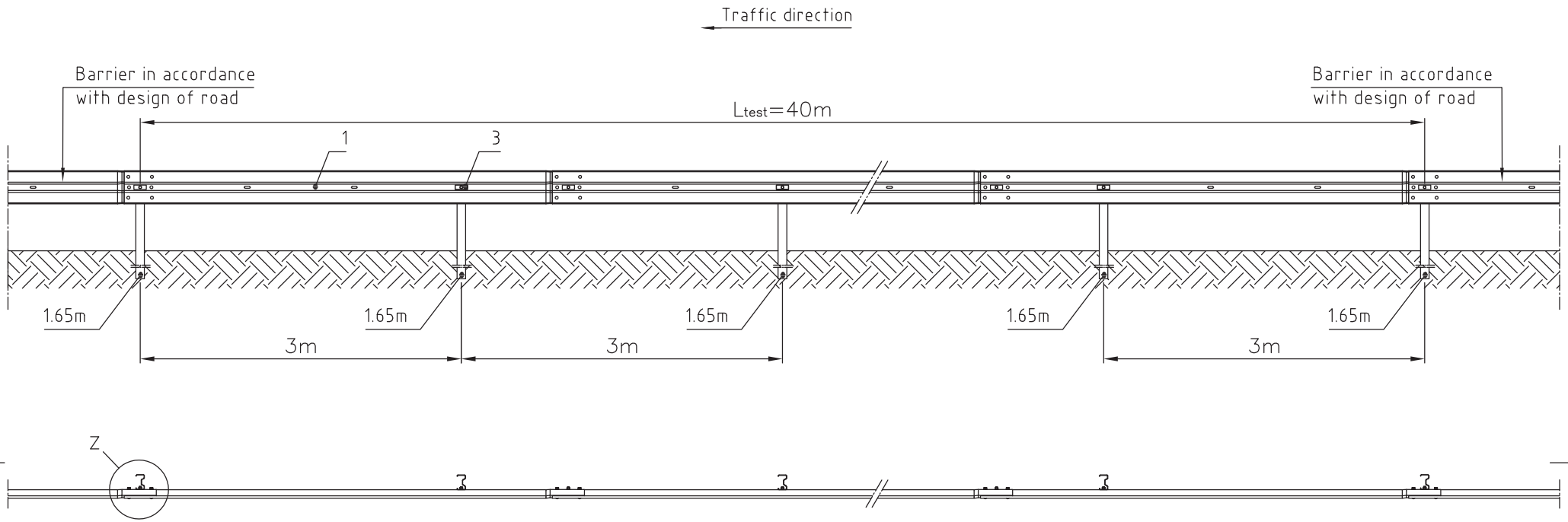

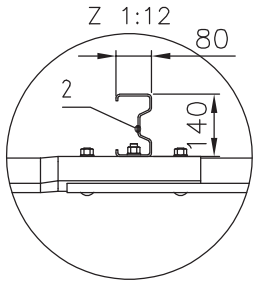

List of elements:
1. Guardrail type B (DBO–0148, DBO–1315)
2. Sigma Post StalPro (DBO–1319)
3. Washer M16 (DBO–0513)

Drawing name Single side safety barrier StalPro Rail sy	Mass	AutoCAD	Change drawing No
Archive index	Number of drawing StalPro Rail sy	Sheet No Amount	Substituted by
STALPRODUKT S.A.			

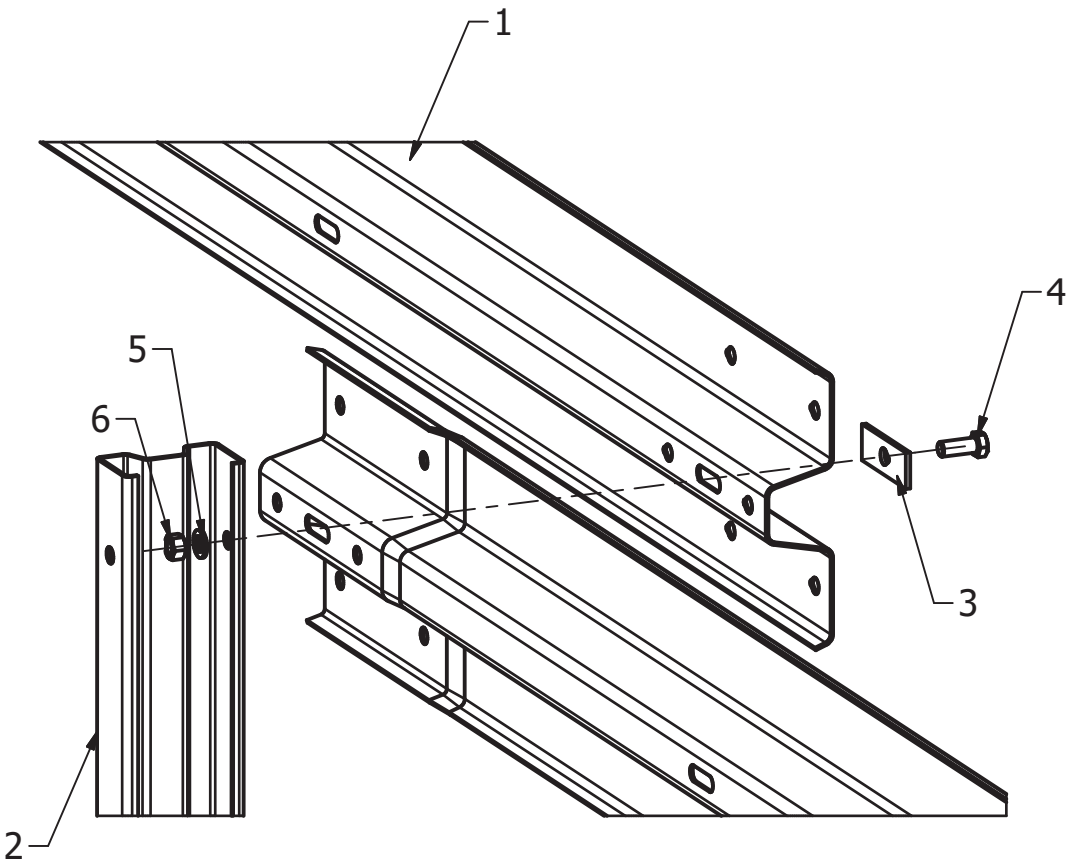

List of elements:

1. Guardrail type B (DBO-0148, DBO-1315)
2. Sigma Post StalPro (DBO-1319)
3. Washer M16 (DBO-0513)
4. Bolt M16x40; grade 5.8 (DBO-1902)
5. Round washer (DBO-1902)
6. Nut M16 (DBO-1902)

Drawing name Assembly of bolt M16x40 for system StalPro Rail sy		Mass -	INVENTOR	Change drawing No
Archive index	Number of drawing StalPro Rail sy		Sheet No 1 Amount 1	Substituted by
STALPRODUKT S.A. - BOCHNIA				

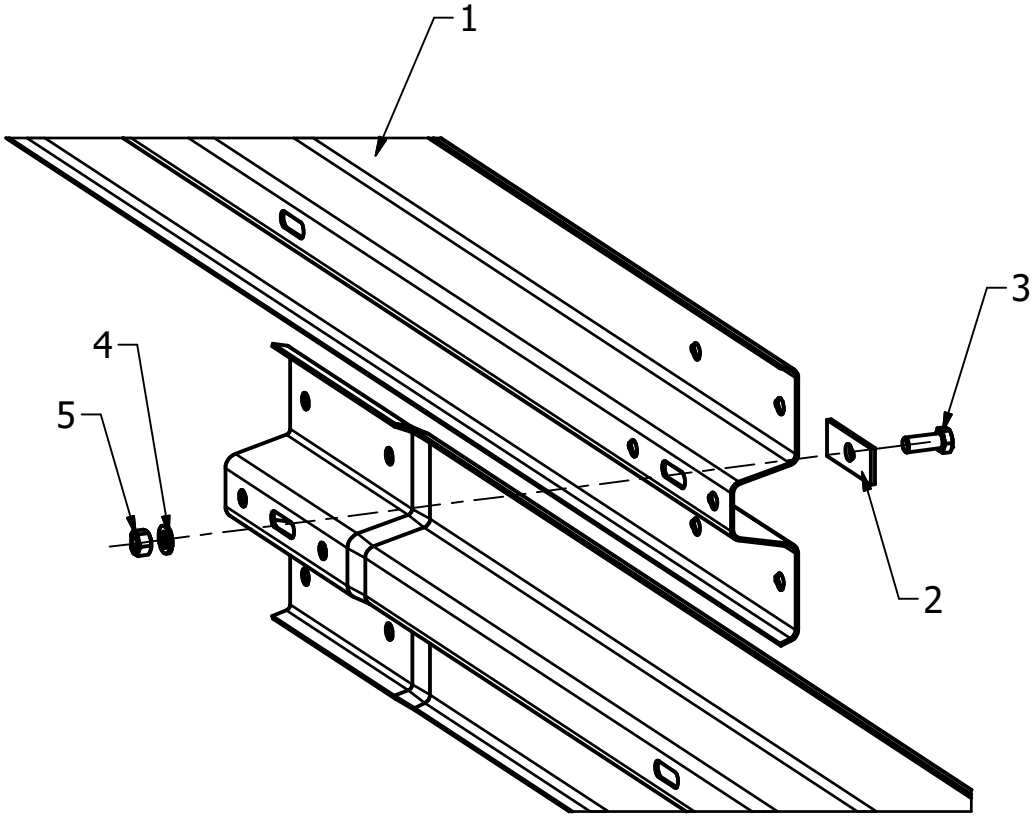

List of elements:

1. Guardrail type B (DBO-0148, DBO-1315)
2. Washer M16 (DBO-0513)
3. Bolt M16x40; grade 5.8 (DBO-1902)
4. Round washer (DBO-1902)
5. Nut M16 (DBO-1902)

Drawing name Assembly of bolt M16x40 for system StalPro Rail sy (connection without post)	Mass -	INVENTOR		Change drawing No
Archive index	Number of drawing StalPro Rail sy	Sheet No	1	Substituted by
		Amount	1	
STALPRODUKT S.A. - BOCHNIA				

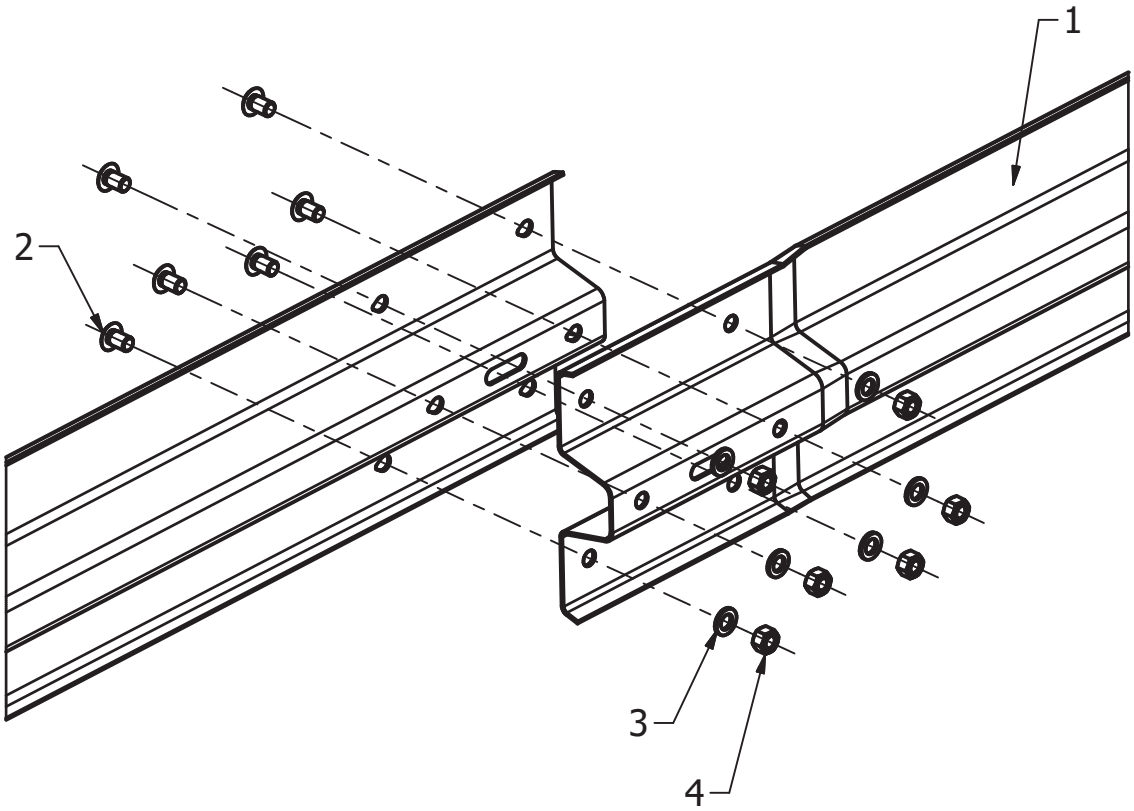

List of elements:
1. Guardrail type B (DBO-0148, DBO-1315)
2. Bolt M16x25; grade 8.8 (DBO-1930)
3. Round washer (DBO-1930)
4. Nut M16 (DBO-1930)

Drawing name Assembly of bolt M16x25 for system StalPro Rail sy		Mass -	INVENTOR	Change drawing No
Archive index	Number of drawing StalPro Rail sy	Sheet No 1 Amount 1		Substituted by
STALPRODUKT S.A. - BOCHNIA				

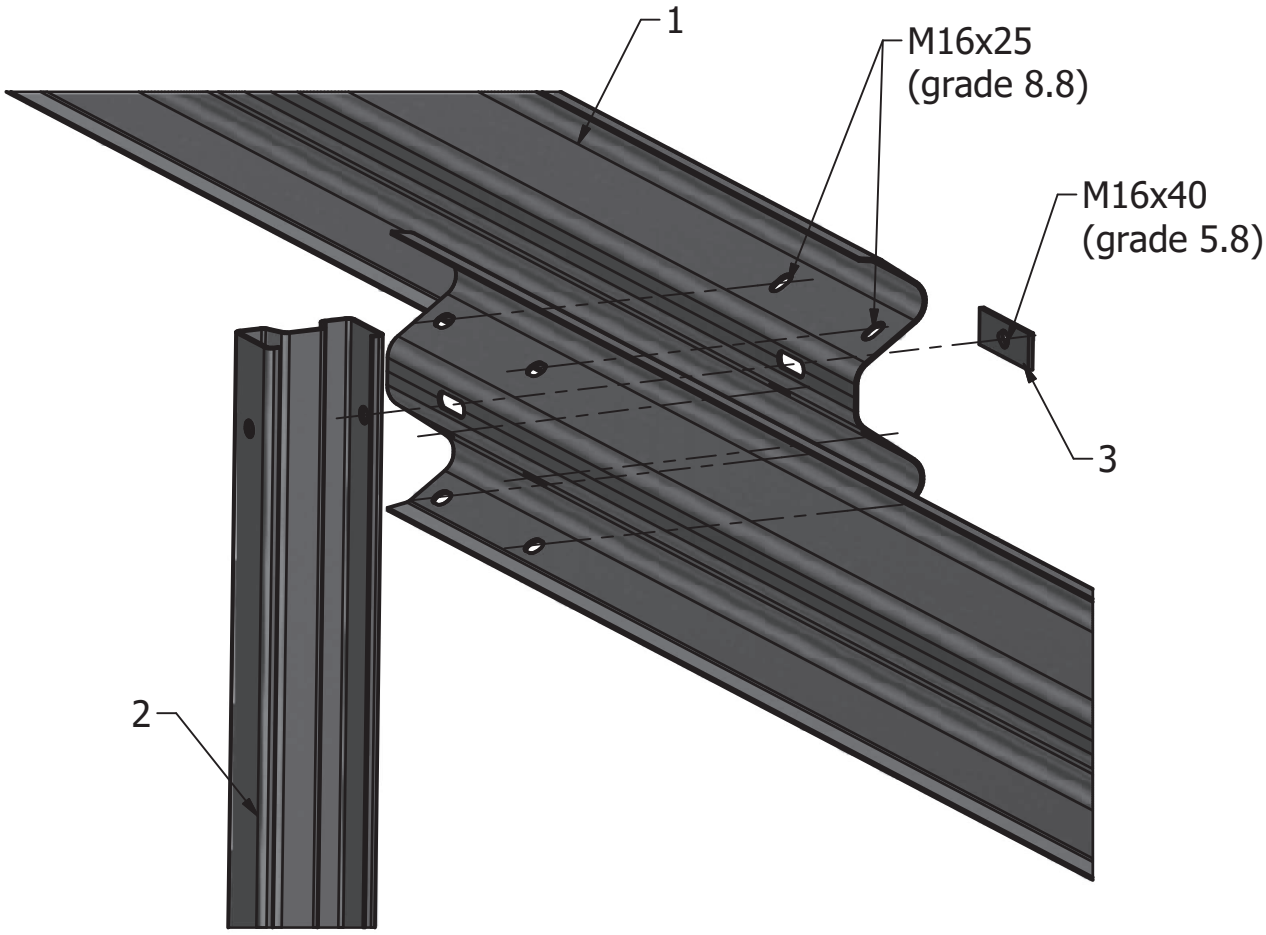

List of elements:
1. Guardrail type A(W) (DBO-0634)
2. Sigma Post StalPro (DBO-1319)
3. Washer M16 (DBO-0513)

Drawing name Assembly drawing safety barrier StalPro Rail sy		Mass -	INVENTOR	Change drawing No
Archive index	Number of drawing StalPro Rail sy		Sheet No 1 Amount 1	Substituted by
STALPRODUKT S.A. - BOCHNIA				

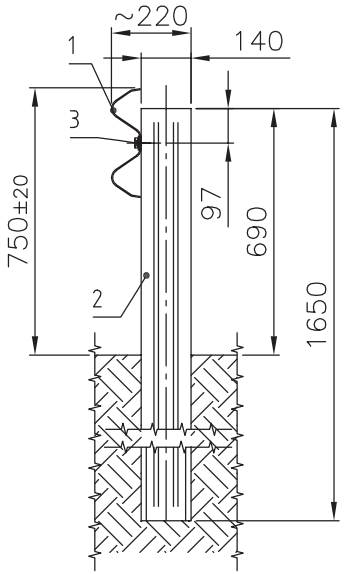

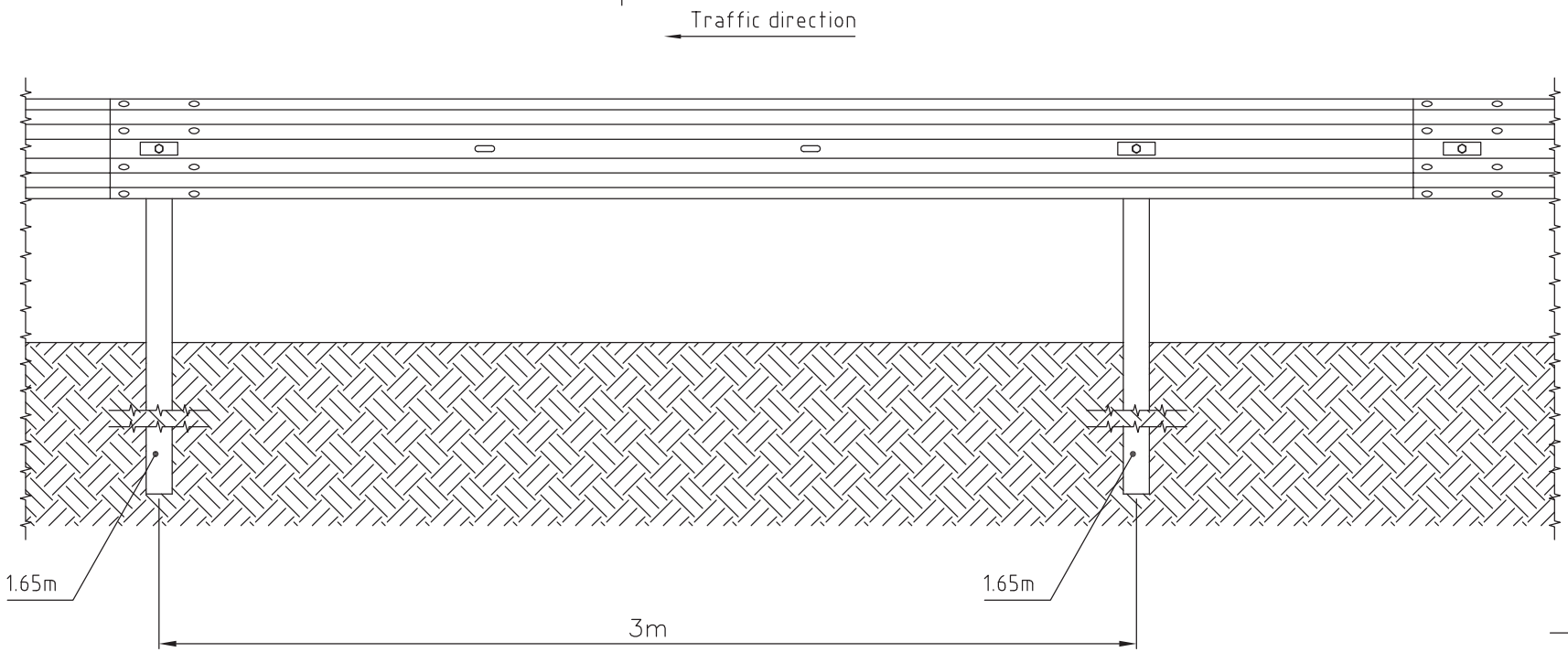

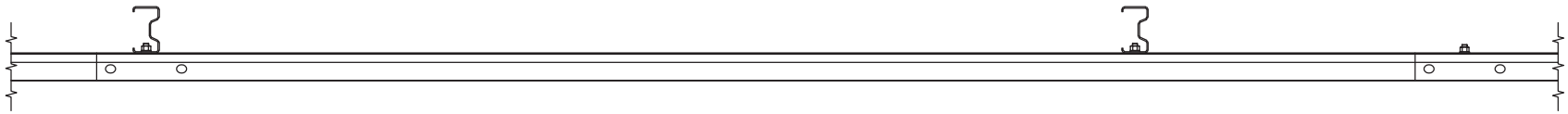

List of elements:
1. Guardrail type A(W) (DBO–0634)
2. Sigma Post StalPro (DBO–1319)
3. Washer M16 (DBO–0513)

Drawing name Single section		Mass	AutoCAD	Change drawing No
	Archive index	Number of drawing StalPro Rail sy	Sheet No Amount	Substituted by
		STALPRODUKT S.A.		

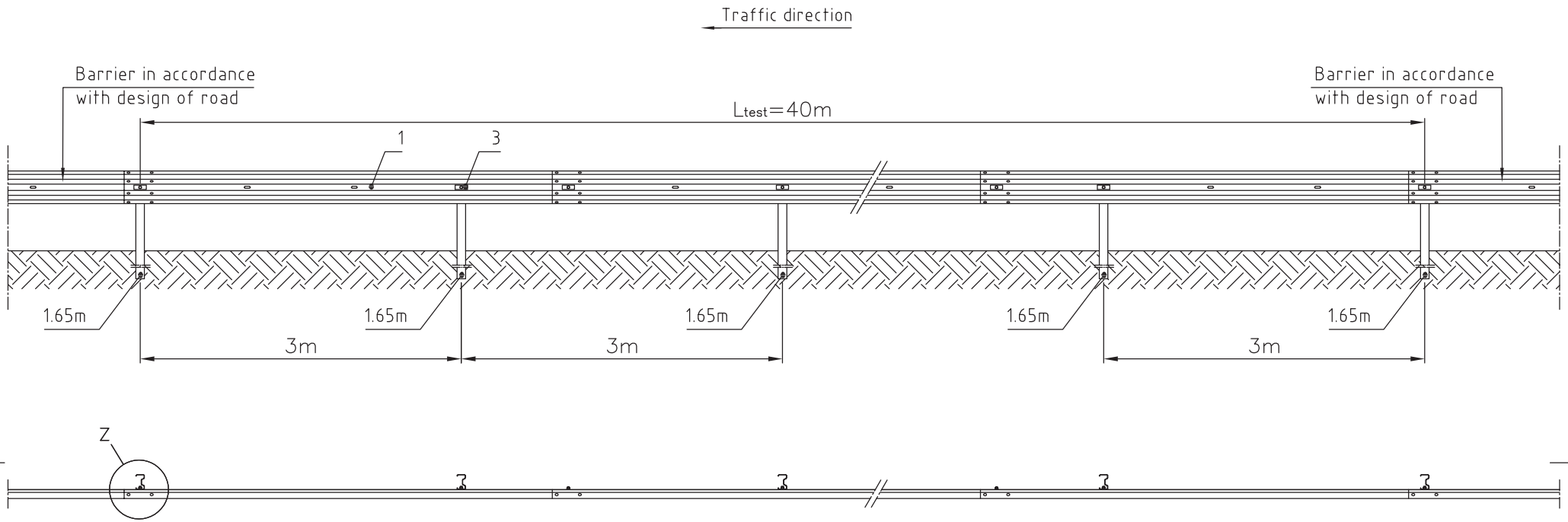

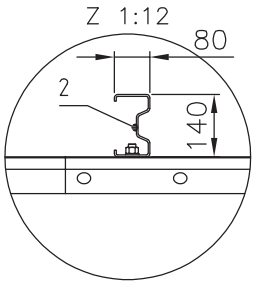

List of elements:
1. Guardrail type A(W) (DBO–0634)
2. Sigma Post StalPro (DBO–1319)
3. Washer M16 (DBO–0513)

Drawing name Single side safety barrier StalPro Rail sy	Mass	AutoCAD	Change drawing No
Archive index	Number of drawing StalPro Rail sy	Sheet No Amount	Substituted by
STALPRODUKT S.A.			

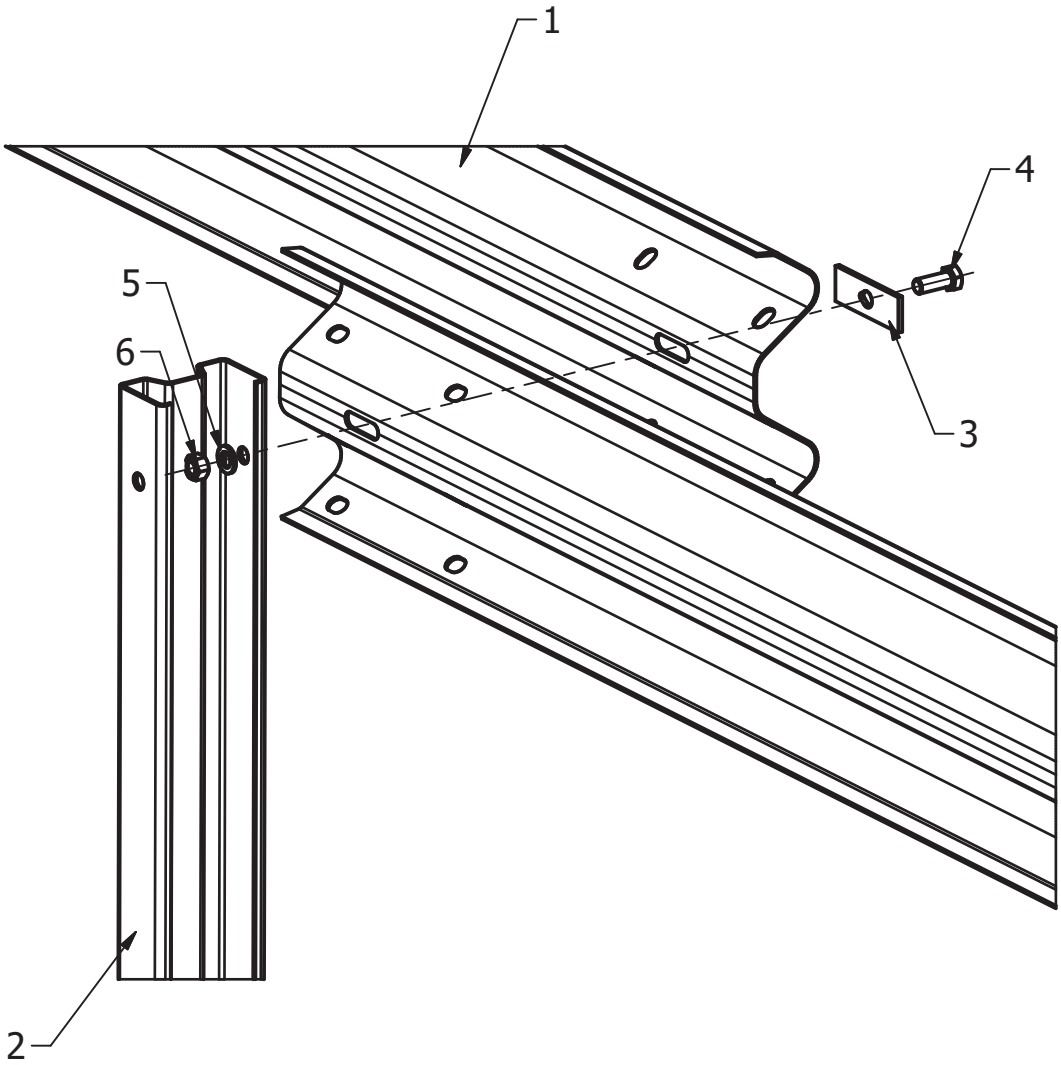

List of elements:

1. Guardrail type A(W) (DBO-0634)
2. Sigma Post StalPro (DBO-1319)
3. Washer M16 (DBO-0513)
4. Bolt M16x40; grade 5.8 (DBO-1902)
5. Round washer (DBO-1902)
6. Nut M16 (DBO-1902)

Drawing name Assembly of bolt M16x40 for system StalPro Rail sy		Mass -	INVENTOR	Change drawing No
Archive index	Number of drawing StalPro Rail sy		Sheet No 1 Amount 1	Substituted by
STALPRODUKT S.A. - BOCHNIA				

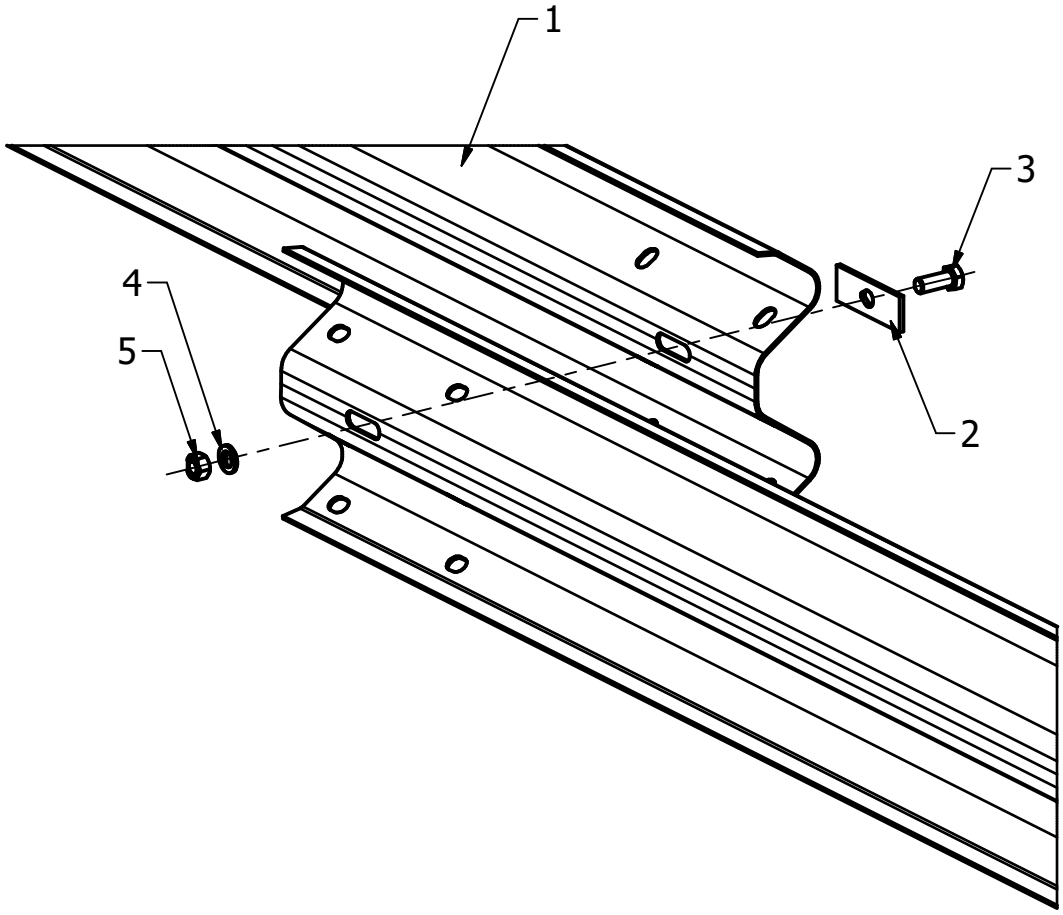

List of elements:
1. Guardrail type A(W) (DBO-0634)
2. Washer M16 (DBO-0513)
3. Bolt M16x40; grade 5.8 (DBO-1902)
4. Round washer (DBO-1902)
5. Nut M16 (DBO-1902)

Drawing name Assembly of bolt M16x40 for system StalPro Rail sy (connection without post)		Mass -	INVENTOR	Change drawing No
Archive index	Number of drawing StalPro Rail sy		Sheet No 1 Amount 1	Substituted by
STALPRODUKT S.A. - BOCHNIA				

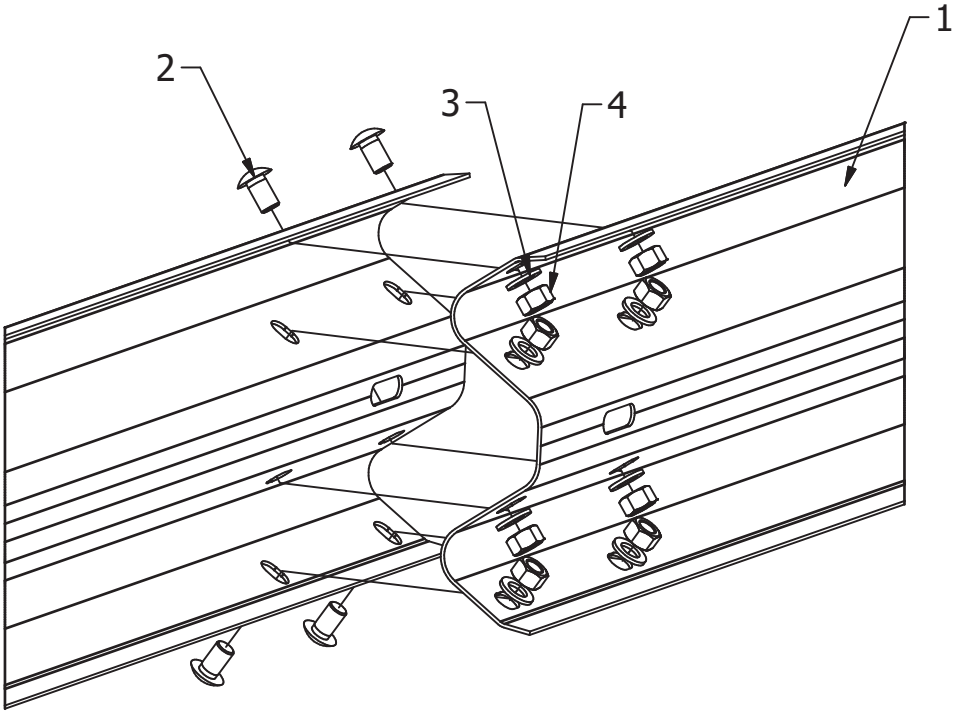

List of elements:
1. Guardrail type A(W) (DBO-0634)
2. Bolt M16x25; grade 8.8 (DBO-1930)
3. Round washer M16 (DBO-1930)
4. Nut M16 (DBO-1930)

Drawing name Assembly of bolt M16x25 for system StalPro Rail sy		Mass -	INVENTOR	Change drawing No
Archive index	Number of drawing StalPro Rail sy		Sheet No 1 Amount 1	Substituted by
STALPRODUKT S.A. - BOCHNIA				