Snoline
A LINDSAY TRANSPORTATION SOLUTIONS COMPANY

Via F. Baracca 19/23
20056 Trezzo sull'Adda (MI)
Tel +39.02909961 Fax +39.0290996200
e-mail export@snoline.com – commerciale2@snoline.com
www.snoline.com

X-TENSION DS END TERMINAL

LINDSAY™
TRANSPORTATION SOLUTIONS

MANUALE DI PRESENTAZIONE
PRESENTATION MANUAL

Snoline
A LINDSAY TRANSPORTATION SOLUTIONS COMPANY

SNOLINE
Via F. Baracca, 19/23 - 20056 Trezzo s/Adda (MI) Italia
Tel. +39 02 90996.1 - Fax +39 02 90996.200
www.snoline.com - e-mail: info@snoline.com

INDEX

SNOLINE
Via F. Baracca, 19/23 - 20056 Trezzo s/Adda (MI) Italia
Tel. +39 02 90996.1 - Fax +39 02 90996.200
www.snoline.com - e-mail: info@snoline.com

Snoline

INTRODUCTION

Improving road safety requires a combination of enforcement, education, and engineering initiatives. It has been well recognized that legislative and enforcement initiatives, such as seat-belt laws and impaired driving enforcement, have reduced the number of crashes on roads.

But also great importance has to be given to the increased safety level of roads ensured by national governments, which decided to take the ambitious step of ensuring their infrastructure is planned, built and maintained taking into consideration the needs and safety of all users.

Steel beam longitudinal barriers protect errant vehicles from roadside hazards; when impacted, they safely redirect the impacting vehicle and minimize the probability of serious injury. Guardrail end terminals are devices placed on the ends of longitudinal barriers and are frequently hit by vehicles that leave the roadway.

Since the late 1980s, there has been a sustained and continuing effort to improve the safety of barrier end treatments.

Energy-absorbing barrier end treatments are effective at reducing the severity of collisions. Fatalities can be reduced by up to 78 percent, and injuries by up to 68 percent, with the introduction of these devices.

An end terminal has two primary functions: 1) to render the end of the barrier safe when impacted head-on, and 2) to provide anchorage to the system, often with an anchor cable. It has to be tested according the ENV 1317-4 standard, which deals with impact tests acceptance criteria and test methods for terminals and transitions of safety barriers.

EN

SNOLINE
Via F. Baracca, 19/23 - 20056 Trezzo s/Adda (MI) Italia
Tel. +39 02 90996.1 - Fax +39 02 90996.200
www.snoline.com - e-mail: info@snoline.com

Product Description

X-Tension DS® is a fully redirective guardrail end terminal.

The unique X-Tension DS® technology is a tension based solution rather than compression based. It offers exceptional vehicle control and energy absorbing capabilities in head on impacts. X-Tension DS® substantially consists of an impact head with a bake bar inside, a slider assembly and slider bracket, a cable anchor bracket, a foundation anchor assembly, two cable assemblies, a ground strut, steel breakaway posts and three posts and three 2-beam standard panels.

This exclusive technology features tangent end terminals with the length of need starting at post 1, rather than at post 3. X-Tension DS® is capable of redirecting vehicles of 900 to 1500 kg impacting the side of the system at an angle of up to 20° and 110 km/h when impacting from the length of need.

When impacted head on, the vehicle is brought to a controlled stop or allowed to penetrate to the back side, depending on the impact conditions. In all head on impacts, varying amounts of energy are dissipated depending on the length of time the vehicle remains in contact with the impact head.

During head on impacts, X-Tension DS® is energy absorbing with resistance at the impact head rather than being transferred down the rail as in other terminals. Even high angle (15° during testing) impacts on the nose resulted in the vehicle being redirected and controlled. The head, rail one and the slider telescope over rail two until rail two comes to rest in the back of the impact head. At this point, the V-notch bolts joining rails two and three are sheared allowing the entire rail one, head, slider and rail two assembly to slide over rail three. As the head is pushed down the two cables, the cables are pulled through the cable friction plate in a twisting path which dissipates the energy.

Why choosing X-Tension DS®:

X-Tension DS® is suitable for all road types: Motorways, country roads, city streets for speed categories up to 110 km/h.

SNOLINE
Via F. Baracca, 19/23 - 20056 Trezzo s/Adda (MI) Italia
Tel. +39 02 90996.1 - Fax +39 02 90996.200
www.snoline.com - e-mail: info@snoline.com

Snoline

X-Tension DS® is very easy to install. With the use of proper tools and trained crew of 2/3 workers, the estimated time for installation is about 2/3 hours depending on site conditions, traffic, size and experience of work crew, and quality of tools. X-Tension DS® technology provides a greater length of protective barrier in every situation, therefore reducing the length and cost of installations.

X-Tension DS® is safe. The impact force held in tension therefore there is less chance of kinked rail.

X-Tension DS® is easy to transport.

X-Tension DS® is very flexible. Parts Interchangeable between **X**-Tension DS® and X-Tension 110® systems.

X-Tension DS® is tested according ENV 1317-4 and NCHRP 350 at 110km/h.

X-Tension DS® is a tension based system.

SNOLINE
Via F. Baracca, 19/23 - 20056 Trezzo s/Adda (MI) Italia
Tel. +39 02 90996.1 - Fax +39 02 90996.200
www.snoline.com - e-mail: info@snoline.com

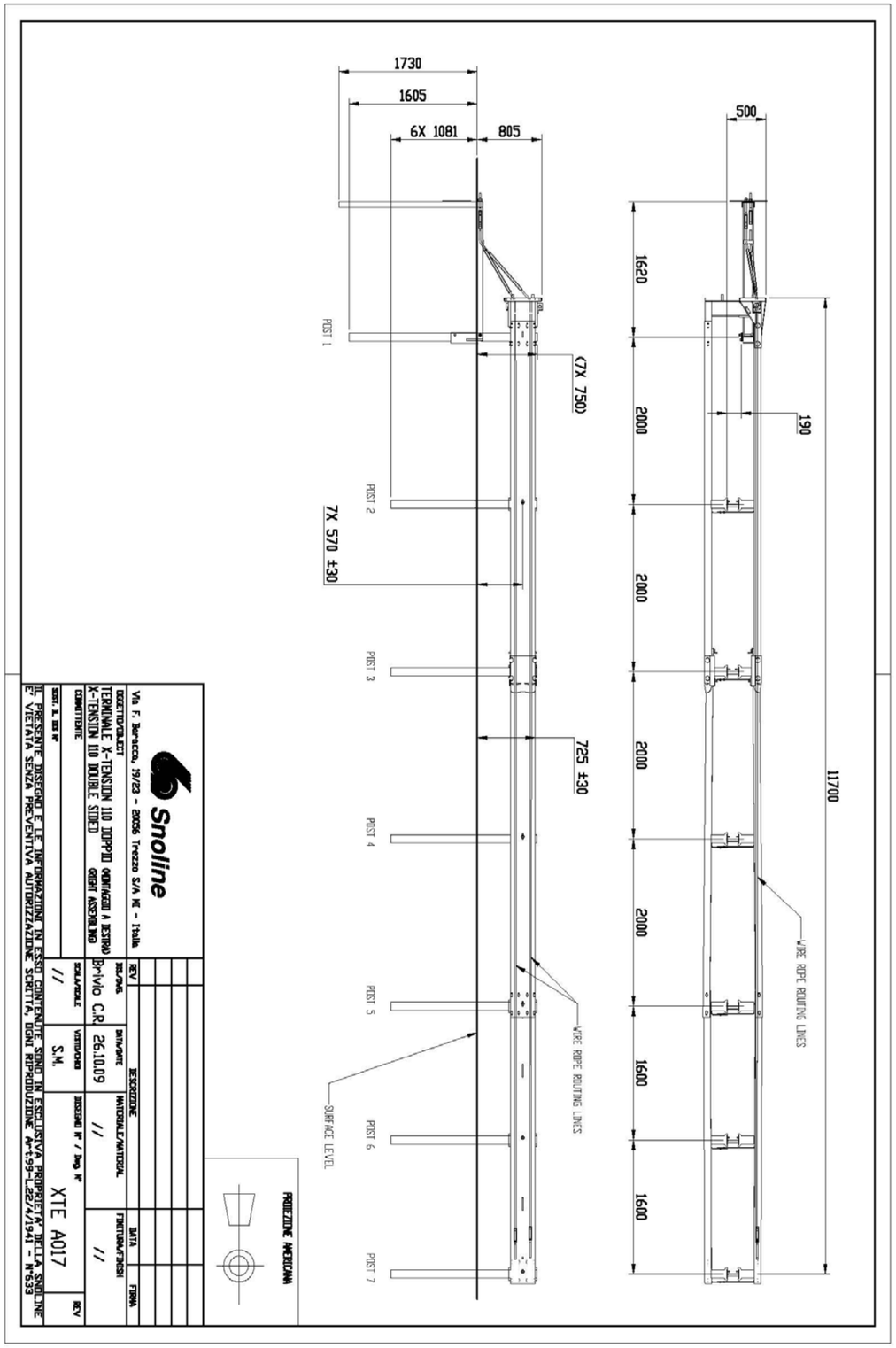

SNOLINE
Via F. Baracca, 19/23 - 20056 Trezzo s/Adda (MI) Italia
Tel. +39 02 90996.1 - Fax +39 02 90996.200
www.snoline.com - e-mail: info@snoline.com

Snoline

INSTALLATION

Placement and use of the X-Tension DS® Terminal should be done in accordance with the guidelines and recommendations set forth in the Installation and Maintenance Manual. The X-Tension DS® Terminal is an engineered safety device made up of a relatively small number of parts. Before starting installation ensure that the installer is trained to the required standards and familiar with the components and layout of the system.

Before installing an X-Tension DS® Terminal, ensure that all materials required for the system are on site and have been identified.

Ensure that the area where the X-Tension DS® is to be installed is prepared so that the ground anchor will not protrude more than 100mm above ground level.

Install posts 2 to 6 at correct spacing and height.

Install post 1, ground strut and ground anchor. Hang beam 3 and fix rope anchor bracket . Hang X-Tension DS® beam 2 and fit shear bolts. Attach slider bracket to X-Tension DS® beam 2. Assemble slider panel onto X-Tension DS beam 1. Hang X-Tension DS® beam 1. Attach impact head. Install the ropes. Turn the friction plate. Tighten the ropes. Attach secondary impact head. Attach backside beam 3 and beam 2. Attach slider bracket to backside beam 2. Hang curved backside beam 1. Attach nose.

For more details please ask for the installation and maintenance manual.

EN

SNOLINE
Via F. Baracca, 19/23 - 20056 Trezzo s/Adda (MI) Italia
Tel. +39 02 90996.1 - Fax +39 02 90996.200
www.snoline.com - e-mail: info@snoline.com

SPECIFICATIONS

The device is a *Redirective end terminal*, as defined by the European Standard.

It can be used anywhere protection against impact is required for obstacles, including structures, and on any road surface.

The containment level is P4 in accordance with the standard ENV1317-4:2000 which is used to evaluate the *end terminals*.

It means that the X-Tension DS® was tested and simulated, considering all the 4 crash tests required conditions for a double side end terminal in this class, and listed in the table below:

TEST [1)]	APPROACH	TOTAL VEHICLE MASS KG	VELOCITY KM / H
TT 2.1.100	Head on nose 1/4	900	100
TT 1.3.110	Head-on centre	1500	110
TT 4.3.110	Side, 15° 2/3 L	1500	110
TT 5.1.100	Side, 165° 1/2 L	900	100

1)Test notation as follows:
TT test of the terminal
1 approach
2 test vehicle mass: 1 = 900 kg, 2 = 1300 kg, 3 = 1500 kg
100 impact speed
NOTE 1 To avoid ambiguity, the numbering of the approach path in table 1 and in Figure 3 is the same as in EN 1317-3; approach 3 is present in EN 1317-3 as test 3 for crash cushions, but it is not required for Terminals.
NOTE 2 Test 5 will not be run for a crash cushion of non-parallel from when, at the relevant impact point the angle (α) of the vehicle path the traffic face of the crash cushion is less than 5°.

EN

SNOLINE
Via F. Baracca, 19/23 - 20056 Trezzo s/Adda (MI) Italia
Tel. +39 02 90996.1 - Fax +39 02 90996.200
www.snoline.com - e-mail: info@snoline.com

Snoline

CRASH TESTS TABLE

TERMINAL X-TENSION 110 DOUBLE SIDED
IMPACT TEST

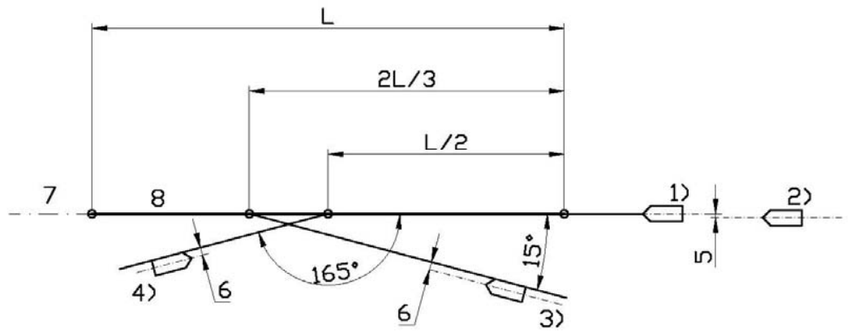

KEY

1) - TEST 1
2) - TEST 2
3) - TEST 3
4) - TEST 4
5 - ¼ VEHICLE WIDTH
6 - ½ VEHICLE WIDTH
7 - BARRIER
8 - TERMINAL

Test	Impact condition	Total vehicle mass kg	Velocity km/h	Test N°	ASI A≤1.0 B≤1.4	PHD ≤20 g	THIV km/h	
TT 1.3.110	Head-on centre 0°	1500	110	1	1.05	16.2	28.8	≤ 44 km/h
TT 2.1.100	Head-on ¼ vehicle offset	900	100	2	1.35	12.9	38.2	
TT 4.3.110	Side impact at 15°	1500	110	3	0.76	13.2	19.6	≤ 33 km/h
TT 5.1.100	Side impact reverse at 165°	900	100	4	1.1	5.4	23.7	

Snoline
02/11/'09
REV. 0
Via F. Baracca, 19/23 - 20056 Trezzo S/A MI - Italia

EN

SNOLINE
Via F. Baracca, 19/23 - 20056 Trezzo s/Adda (MI) Italia
Tel. +39 02 90996.1 - Fax +39 02 90996.200
www.snoline.com - e-mail: info@snoline.com

REUSABILITY

X-Tension DS® is a reparable device. Types of repair are divided into two categories: Traffic Face Impacts and Head on Impacts.

The key repair steps in traffic face impacts are:

1. Remove ropes
2. Remove damaged beam
3. Remove components from beams
4. Remove damaged posts
5. Assess damage
6. Reassemble

In traffic face impacts any part that cannot be reused must be replaced with a new part. **ALWAYS REPLACE THE YELLOW SHEAR BOLTS**. If undamaged ropes can be reused.

Generally, all the specialized components of the system such as the head and brackets should be undamaged.

EN

Key repair steps in head on impacts are:

1. Remove the rope
2. Pull the beams back
3. Remove components from beams
4. Remove damaged posts
5. Assess damage
6. Reassemble

In head on impacts any part that cannot be reused must be replaced with a new part. In minor impacts (beams telescoped less than 3 meters) the ropes can be reused by turning them end for end. If additional damage has occurred, replace the ropes. Generally, all the specialized components of the system such as the head and brackets should be undamaged.

CARE MUST BE TAKEN WHEN REMOVING THE ROPES.

SNOLINE
Via F. Baracca, 19/23 - 20056 Trezzo s/Adda (MI) Italia
Tel. +39 02 90996.1 - Fax +39 02 90996.200
www.snoline.com - e-mail: info@snoline.com

Snoline

FAQ

1. What is an "End Terminal"?

An *End Terminal is a t*reatment of the beginning and/or the end of a safety barrier so as to lessen the impact in the event of a collision. It is part of the family of safety fences.

2. What are the dangers involved in colliding with an obstacle?

When a collision occurs any unrestrained body in the vehicle continues to follow the trajectory of the vehicle and so smashes into the sides of the vehicle itself, causing fractures and in many cases irreparable damage to internal organs.

If the passenger is wearing a seatbelt, the body is restrained but the internal organs can suffer the effects of strong acceleration and be ruptured. Moreover, the head is not restrained and may suffer trauma to the cervical vertebrae (whiplash) or injury from banging against the inside of the vehicle. During the design stages, car manufacturers run crash impact tests at speeds of up to 50 km/h, even for top of the range models, so the injuries are probably very serious in traffic accidents occurring at speeds greater than 50 km/h.

EN

3. How does a X-Tension DS® work?

For traffic face impacts, tension in the rail is transferred via the cables to the foundation anchor to provide containment and redirection. For head-on and angled impacts directly at the end, friction between the cables and the impact head dissipates crash energy and the slider/slider bracket assembly allows the first W-beam rail segment to slide back along the segment and away from the impacting vehicle.

4. What's the difference between a tension based system and a compression based system?

A tension based system relies solely on components contained in the impact head as it moves down the length of the system during an impact.

A typical compression based system relies on multiple components downstream from the impact head. Therefore, there is less component interactivity with a tension based system.

5. Energy Absorbing or Non-Energy Absorbing?

Some end treatments absorb energy from an impacting vehicle, and some do not. The X-Tension DS® End Terminal is an energy-absorbing system.

The conditions at a particular site may determine that an energy-absorbing terminal is more desirable than a non-energy-absorbing terminal because of the proximity of the end terminal hazard.

6. To what kind of barrier can the X-Tension DS® End Terminal be connected?

X-Tension can be directly connected to the existing barrier as long as its height, profile and dimension are the same of the barrier's one. On the contrary, it's necessary to study suitable connections, in order to avoid possible discontinuities. Snoline is able to realize connections to most type of barrier. Please contact the Commercial Department for more information.

7. Where should the X-Tension DS® be placed?

The end terminal has to be placed in front of a barrier in order to guarantee the continuity of the barrier lateral surface facing traffic. Therefore, as the barrier spacer blocks and posts could be different from the end terminal ones, during the installation the barrier line has to be traced with a rope (along which the terminal beams have to be placed) in order to place correctly the terminal posts.

8. Where should the X-Tension DS® be placed (2)?

X-Tension DS® End Terminal has been designed to be installed in verge reserve and median locations, as terminal section (at the beginning or at the end) of a safety barrier.

Ensure that the area where the X-Tension DS® has to be installed is ready for the installation (the criteria are the same requested for the installation of the safety barrier). X-Tension DS® can be placed on stabilized ground, asphalt or concrete.

9. What is the X-Tension DS® Posts behavior?

The terminal posts behave exactly like the barrier ones. Laterally, they react to the vehicle containment together with the beams traction.

Frontally, the system is dimensioned so that the energy is absorbed mainly by the deformation (and partially by friction) of the wire ropes.

The posts felling is caused by plastic hinge shaped some cm underneath the ground. To help the felling, in case of head-on impact, the posts have been weakened through localized deformation, without material removal. Moreover, the posts have been worked on the top in order to unhook easily from the beam in case of head-on impact, in order to avoid the system sticking.

10. Which are Advantages and Benefits?

X-Tension DS® is a redirective end terminal, it begins to redirect already at post 1. That means that there is no length of need.

X-Tension DS® is universal applicable. It can be installed in any location suitable for an end terminal.

The tension technology allows impact resistance at the impact head.

X-Tension DS® uses locally supplied materials with kit of X-Tension parts.

X-Tension DS® can be directly connected to all W profile beams and can be connect to all other guardrails through suitable connections.

11. What maintenance is required?

When not in use, the X-Tension DS® is a static system and does not require any maintenance in order to function. However, because it is exposed to the elements and to pollutants in the air, it is a good idea to carry out an annual cleaning, thorough inspection and protection of all the important parts.

The installation and maintenance manual provides details of these procedures and the necessary equipment.

SNOLINE
Via F. Baracca, 19/23 - 20056 Trezzo s/Adda (MI) Italia
Tel. +39 02 90996.1 - Fax +39 02 90996.200
www.snoline.com - e-mail: info@snoline.com

SNOLINE
Via F. Baracca, 19/23 - 20056 Trezzo s/Adda (MI) Italia
Tel. +39 02 90996.1 - Fax +39 02 90996.200
www.snoline.com - e-mail: info@snoline.com

Snoline

12. What about X-Tension DS® transportation?

The X-Tension DS® terminal is very easy to be transported to site. It weights only 680kg.

13. How to get spare parts?

Spare parts are available at local distribution or through Snoline s.p.a. and can be shipped within 24 hours upon acceptance of an order.

ANNEXES

SNOLINE
Via F. Baracca, 19/23 - 20056 Trezzo s/Adda (MI) Italia
Tel. +39 02 90996.1 - Fax +39 02 90996.200
www.snoline.com - e-mail: info@snoline.com

DRAWINGS

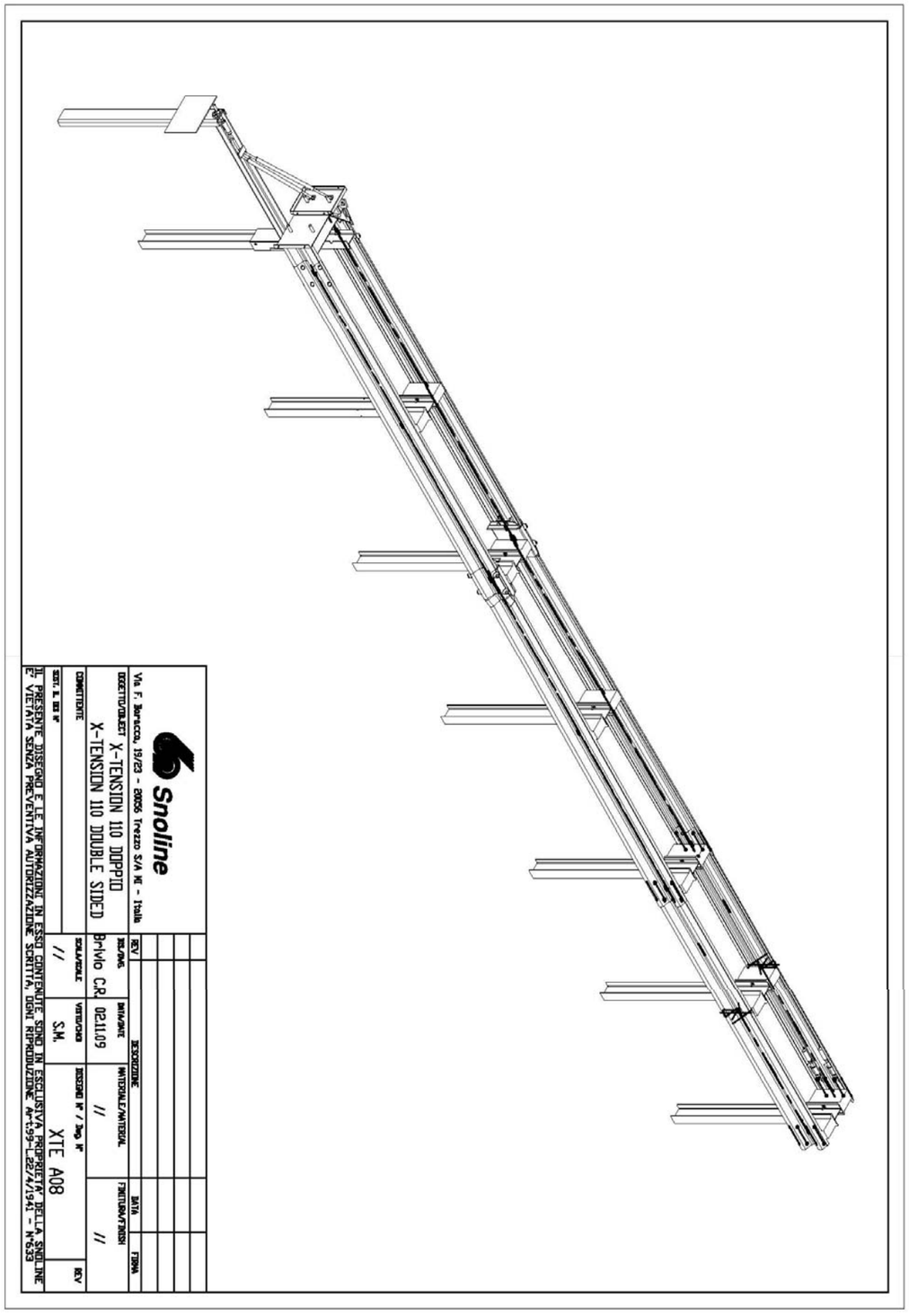

Snoline

SNOLINE
Via F. Baracca, 19/23 - 20056 Trezzo s/Adda (MI) Italia
Tel. +39 02 90996.1 - Fax +39 02 90996.200
www.snoline.com - e-mail: info@snoline.com

PICTURES

SNOLINE
Via F. Baracca, 19/23 - 20056 Trezzo s/Adda (MI) Italia
Tel. +39 02 90996.1 - Fax +39 02 90996.200
www.snoline.com - e-mail: info@snoline.com

Crash Tests Results

Hereinafter the crash tests results. The complete crash tests reports are available at Snoline s.p.a.

EN 1317 Crash Test Report
December, 2008

X-Tension™ 110, Double Sided Terminal (XT-DS110)
Performance Class: P4
This Report Contains (1) Test: TT 2.1.100

Prepared For:
Barrier Systems, Inc.
3333 Vaca Valley Parkway #800, Vacaville, CA 95688 - USA

Snoline S.p.A.
Via F. Baracca, 19/23, 20056 Trezzo s/Adda (MI) – Italy

Prepared by:
Safe Technologies, Inc.
170 River Road
Rio Vista, California, 94571, U.S.A.

Jeff D. Shewmaker
General Manager

Final Report Date: May 26, 2009
Report #: XTDS110

This report shall not be reproduced except in full, without the prior written approval of Safe Technologies, Inc.

Safe Technologies, Inc.
CRASH TEST SERVICES
170 River Road, Rio Vista, CA 94571

ilac-MRA
ACCREDITED
ISO 17025 Laboratory
Certificate # 1851-01

STI is authorized to carry out testing under the responsibility of the Certification Notified Body, MIRA Limited.
Certificate of Authroisation # 0888-TLA-0332-2009 – MIRA TLA #0332

092909

EN

SNOLINE
Via F. Baracca, 19/23 - 20056 Trezzo s/Adda (MI) Italia
Tel. +39 02 90996.1 - Fax +39 02 90996.200
www.snoline.com - e-mail: info@snoline.com

Snoline

EN

EN

Safe Technologies, Inc. CRASH TEST SERVICES 170 River Road, Rio Vista, CA 94571	X-Tension 110 DS Terminal Barrier Systems, Inc.	Report # XTDS110	Page 10 of 51

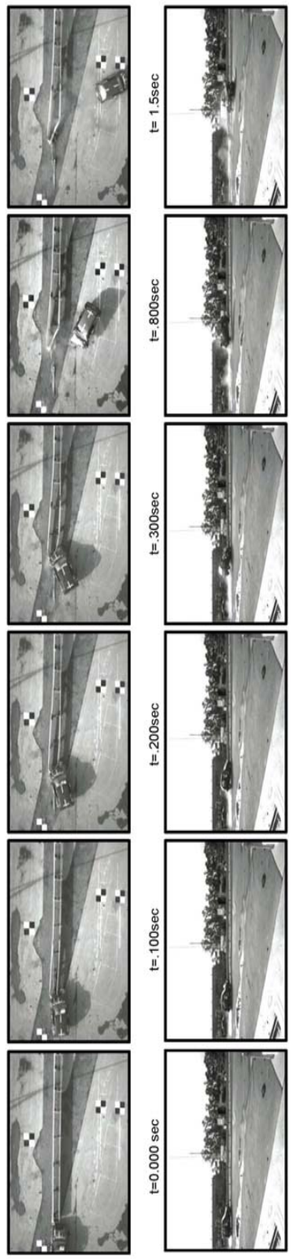

General Information
Test Agency..... **SAFE TECHNOLOGIES, INC.**
Test Designation..... **EN 1317-4, Test TT 2.1.100**
Test No..... **XT201**
Date..... Dec. 18, 2008

Test Article
Type..... X-Tension 110, Double Sided Terminal
Barrier Systems, Inc.
Installation Length..... 11.7 m system / 28.2 m Total
Size and/or dimension and material
of key elements..... Length 11.7 m, System Height 800 mm,
Width 530 mm

Test Vehicle
Type..... Production Model
Designation..... 900 kg
Model..... 1990, Ford Festiva

Mass (kg)
Curb..... 761
Dummy(s)..... 75
Test Mass..... 911

Impact Conditions
Speed (km/h)..... 101.6
Angle (deg)..... 0

Exit Conditions
Speed at 6m Exit Box (km/h)..... 10

Occupant risk Values
Impact Velocity (m/s)
x-direction..... 9.5
y-direction..... -0.7
Ridedown Acceleration (g's)
x-direction..... -11
y-direction..... -11
THIV (km/h)..... 33
PHD (g's)..... 12
ASI..... 1.3

Test Article Deflection (mm)
Dynamic..... 534
Permanent..... 440
Permanent lateral Displacement Zone D1.1
Impact Severity Class ..... B
Redirection Exit Box Class Z2

Vehicle Damage
Exterior
VDS..... FL-5
CDC..... 11FYAW4
Interior
VCDI..... LF0020000

Figure 2. Summary of Results Test #XT201

SNOLINE
Via F. Baracca, 19/23 - 20056 Trezzo s/Adda (MI) Italia
Tel. +39 02 90996.1 - Fax +39 02 90996.200
www.snoline.com - e-mail: info@snoline.com

Snoline

EN

FEM simulations.

EN1317-4 TT 1.3.110 test.

Simulation results:

This test represents a frontal centred impact no offset with the 1500 kg vehicle at 110 km/h

Test Summary Report (Using SAE Class 180 Filter on Acceleration Data and Angular Velocity/Displacement Data)

General Information
Test Agency: Politecnico di Milano
Test Number: TT 1.3.110
Test Date:
Test Article: XT110DS

Test Vehicle
Description: Modified Ford Taurus
Test Inertial Mass: 1500 kg
Gross Static Mass: 0 kg

Impact Conditions
Speed: 110.0 km/hr
Angle: 0.0 degrees

Occupant Risk Factors
Impact Velocity (m/s) at 0.1255 seconds on front of interior
x-direction 8.0
y-direction -0.2

THIV (km/hr): 28.8 at 0.1256 seconds on front of interior
THIV (m/s): 8.0

Ridedown Accelerations (g's)
x-direction -15.8 (0.2088 - 0.2188 seconds)
y-direction -4.5 (0.2044 - 0.2144 seconds)

PHD (g's): 16.2
(0.2087 - 0.2187 seconds)

ASI: 1.05
(0.0136 - 0.0636 seconds)

Max. 50msec Moving Avg. Accelerations (g's)
x-direction -12.5
(0.0138 - 0.0638 seconds)
y-direction -2.8
(0.6159 - 0.6659 seconds)
z-direction -4.2
(0.0423 - 0.0923 seconds)

Max Roll, Pitch, and Yaw Angles (degrees)

Roll N/A
Pitch N/A
Yaw N/A

EN

EN1317-4 TT 4.3.110 test.

This test represents a lateral impact with the 1500 kg vehicle at 110 km/h 15° angle

Simulation results:

General Information
Test Agency: Politecnico di Milano
Test Number: TT 4.3.110
Test Date:
Test Article: XT110DS

Test Vehicle
Description: Modified Ford Taurus
Test Inertial Mass: 1500 kg
Gross Static Mass: 0 kg

Impact Conditions
Speed: 110.0 km/hr
Angle: 15.0 degrees

Occupant Risk Factors
Impact Velocity (m/s) at 0.1295 seconds on left side of interior
x-direction 2.6
y-direction -5.2

THIV (km/hr): 19.6
at 0.1268 seconds on left side of interior
THIV (m/s): 5.4

Ridedown Accelerations (g's)
x-direction -3.5
(0.1481 - 0.1581 seconds)
y-direction 13.1
(0.1802 - 0.1902 seconds)

PHD (g's): 13.2
(0.1802 - 0.1902 seconds)

ASI: 0.76
(0.1421 - 0.1921 seconds)

Max. 50msec Moving Avg. Accelerations (g's)
x-direction -3.2
(0.0537 - 0.1037 seconds)
y-direction 6.7
(0.1421 - 0.1921 seconds)
z-direction -2.1
(0.2016 - 0.2516 seconds)

Max Roll, Pitch, and Yaw Angles (degrees)
Roll N/A
Pitch N/A
Yaw N/A

EN1317-4 TT 5.1.100 test.

This test represents a reverse impact with the 900 kg vehicle at 100 km/h 15° angle

General Information
Test Agency: Politecnico di Milano
Test Number: TT 5.1.100
Test Date:
Test Article: XT110DS Numerical simulation

Test Vehicle
Description: Modified Geo Metro
Test Inertial Mass: 900 kg
Gross Static Mass: 0 kg

Impact Conditions
Speed: 100.0 km/hr
Angle: 15.0 degrees

Occupant Risk Factors
Impact Velocity (m/s) at 0.1055 seconds on right side of interior
x-direction 4.2
y-direction 5.6

THIV (km/hr): 23.7
at 0.1025 seconds on right side of interior
THIV (m/s): 6.6

Ridedown Accelerations (g's)
x-direction -4.2
(0.1598 - 0.1698 seconds)
y-direction -4.4
(0.1907 - 0.2007 seconds)

PHD (g's): 5.4
(0.1594 - 0.1694 seconds)

ASI: 1.10
(0.0363 - 0.0863 seconds)

Max. 50msec Moving Avg. Accelerations (g's)
x-direction -6.7
(0.0318 - 0.0818 seconds)
y-direction -8.7
(0.0367 - 0.0867 seconds)
z-direction 1.5
(0.0609 - 0.1109 seconds)

Max Roll, Pitch, and Yaw Angles (degrees)
Roll N/A
Pitch N/A
Yaw N/A

APPROVALS

CERTFICATION AND HOMOLOGATION
CONSULTANCY SERVICES CO.

Acceptance Letter Number - 2193-CPD-1002 Revision 01

Promoter:
Highway Care Limited
Unit D
Wharton Court
Leominster
Herefordshire
HR6 0NX

Manufacturer:
Barrier Systems Inc
3333 Vaca Valley Parkway
Vacaville, California.
94571, U.S.A

-and-

Snoline SpA
Via F. Baracca 19/23
20056 Trezzo sull'Adda (MI)
Italy

12th November 2009

Dear Mr Bullock,

X-Tension™ 110 Double Sided P4 Terminal (XT-DS110)
(Marketed in the UK as "Double Sided Xtension P4 Terminal")

EN

I can confirm that I have reviewed the test reports, videos and still photographs and can confirm that the P4 Terminal identified by Safe Technologies Inc Test Report Number XTDS110, dated 26th May 2009 and Dipartimento Di Ingegneria Aerospaziale Politecnico Di Milan Report Number SNO-BSI/23_1/0 is acceptable for use on the Highways Agency road schemes subject to the restrictions given below.

Highway Care Ltd shall produce a drawing showing the zone from which pedestrians, the workforce and other road users shall be excluded during normal operation.

The performance classes of the P4 Terminal shall be taken as follows:

- Performance class: P4
- Impact severity level class: B
- Lateral Displacement Class: X1 and Y1
- Exit Box Class: Z2
- Working Width Class: N/A

The performance classes listed above relate to a tested system length of 58.5, which included a terminal length of 11.7m. Highway Care Ltd will be responsible for specifying any amendments to these values where the actual length of the system or terminal differs from that tested

Use on other UK highways will be at the discretion of the relevant highway authority

Note: Working width is not a required criterion when assessing a Terminal

SNOLINE
Via F. Baracca, 19/23 - 20056 Trezzo s/Adda (MI) Italia
Tel. +39 02 90996.1 - Fax +39 02 90996.200
www.snoline.com - e-mail: info@snoline.com

Snoline

You will also be required to comply with the requirements of the Specification for Highway Works, in particular the quality assurance requirements given in Clause 104 and Appendix A. To assist you in this, I am enclosing the form 'Submission for Compliance with EN 1317'. I am aware that some of the information may have already been provided, but the additional information is required to complete our records. In particular, numbered drawings will be required which uniquely identify the Terminal described above. You will be required to inform the Highways Agency of any amendments that you make to the original drawings.

Highway Care Ltd will be responsible for defining any features of the highway, which would limit the use of the Terminal described above such as supporting surface, foundation requirements, horizontal and vertical alignment etc. Special attention should be paid to identify the installed lengths necessary to achieve full performance at a defined point of need.

Where it is necessary to join the Terminal described above to another barrier Highway Care Ltd, Inc will be responsible for demonstrating the performance of the transition that meet the Highways Agency's requirements. The transition must prevent any force required to tension the parent vehicle restraint system from being transmitted to the Terminal described above.

The drawings provided have not been examined by the Highways Agency/CHCSC. Highway Care Ltd shall remain responsible for their accuracy and content.

The acceptance of the use of this system is based on the information that you have supplied. The Highways Agency's acceptance does not indemnify you against any claims in law. The Highways Agency reserves the right to withdraw its approval if there is evidence that the system performs in a different way from that shown in the Initial Type Test or is required to do so for any other reason.

The performance classes listed above are based on a physical test. Simulations were performed to determine the worst case configuration(s) for testing. There is currently no guidance on the requirements specified in section A.6 of EN1317-5. CHCSC reserve the right to withdraw this acceptance letter should future guidance/legislation mandate requirements inconsistent with the Simulation report.

In the longer term, completion of EN1317 will introduce a system of third party product certification and I can provide/give no guarantee that the current Highways Agency acceptance will be satisfactory to the Notified Body undertaking this responsibility.

Yours sincerely

Andrews

Jenny Andrews, CEng
Technical Manager
Certification and Homologation Consultancy Services Co.
e-mail: jenny.andrews@certificationandhomologation.com

cc: Daniel Ruth, Highways Agency

EN

SNOLINE
Via F. Baracca, 19/23 - 20056 Trezzo s/Adda (MI) Italia
Tel. +39 02 90996.1 - Fax +39 02 90996.200
www.snoline.com - e-mail: info@snoline.com

Modification History
2193-CPD-1002 Revision 01– 12th November 2009

List of modifications

Correction of : - --

Modification of : - --

Addition of : - --

Deletion of : - --

SNOLINE
Via F. Baracca, 19/23 - 20056 Trezzo s/Adda (MI) Italia
Tel. +39 02 90996.1 - Fax +39 02 90996.200
www.snoline.com - e-mail: info@snoline.com

Snoline

ANNEX A

CEN COMPLIANCE [1]

Initial submission documents to be supplied for consideration of initial type test.

1. Test report in accordance with EN1317 Part 1 Section 9.
2. Video/high speed film of test annotated showing date, test number and performance class.
3. Still photographs of complete installation including anchorage points.
4. Still photographs of vehicle before and after impact.
5. Full drawings of tested item.
6. Certification from the manufacturer that the item tested complies with drawings supplied.
7. Certificate from test house.

Additional information, which will be required on acceptance of initial type test prior to installation.

8. Installation drawings.
9. Manufacturer's specification.
10. Manufacturer's installation instructions including foundation requirements and test methods to verify their performance.
11. Manufacturer's repair and maintenance manual.
12. Certificate of compliance with the quality management scheme for Manufacture of fencing components.[2]
13. Compliance with the Sector Scheme for the Supply, Erection and Repair of Vehicle Restraint Systems.[2]
14. Certificate of compliance for the Fabrication and installation of Bridge Parapets and Cradle Anchorages.[3]
15. Nominal loads (direct forces, moments and co-existent shears) to be transferred from the parapet to the structure or foundation. [2 & 3]

Notes

1. All documents, which are not in English, will have to be translated. If they are in a language other than French or German the promoter will be required to supply a full translation.
2. Items 12, 13 and 14 are required for safety fences and barriers.
3. Items 14 & 15 are required for parapets or for systems to be placed on bridge decks or structures.